MQT 300 A Charge to Time

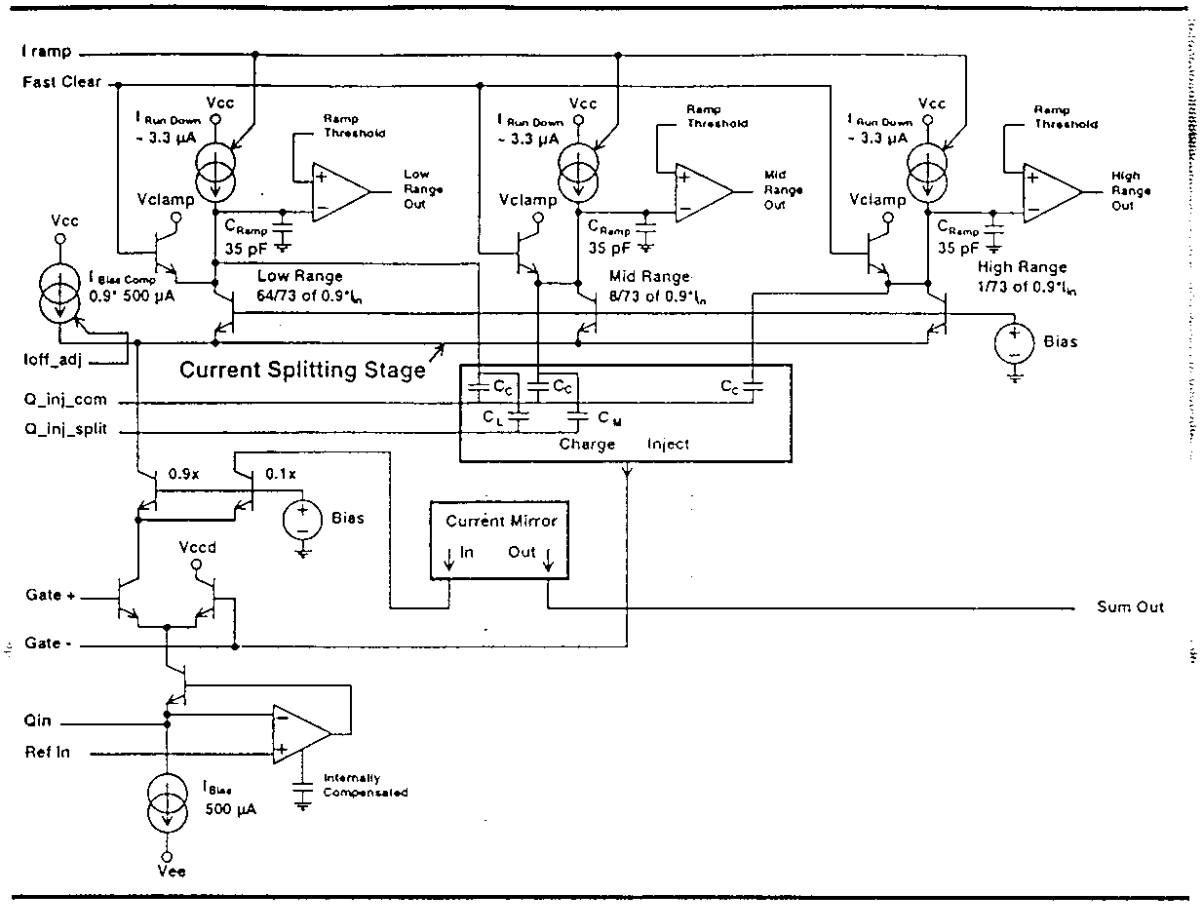

: *The basic elements of the front end of the MQT300A*